

PRF0195520

Boxin Advance Plus

The perimeter extraction system allows this hood to remain concealed without interfering with cabinets. It switches on automatically when it detects smoke; it connects to the hob and the Elica app.

Design by **Design Fabrizio Crisà**

Generic Data

WEIGHT (KG)

11.2

FINISHING

Stainless Steel

DIMENSIONS (CM)

90

ENERGY CLASS

A

MINIMUM DISTANCE FROM WALL UNIT INDUCTION/RADIANT HOB

43cm

MINIMUM DISTANCE FROM WALL UNIT GAS HOB

57cm

DUCT TRANSITION

150mm

LIGHTING

Strip Led 1x7 W - 3500 K - 365 LUX

ABSORPTION

177W

Extraction

AIRFLOW MIN-MAX

180m³/h - 640m³/h

NOISE LEVEL MIN-MAX

45db(A) - 57db(A)

CONTROLS

3S+B Electronic push button

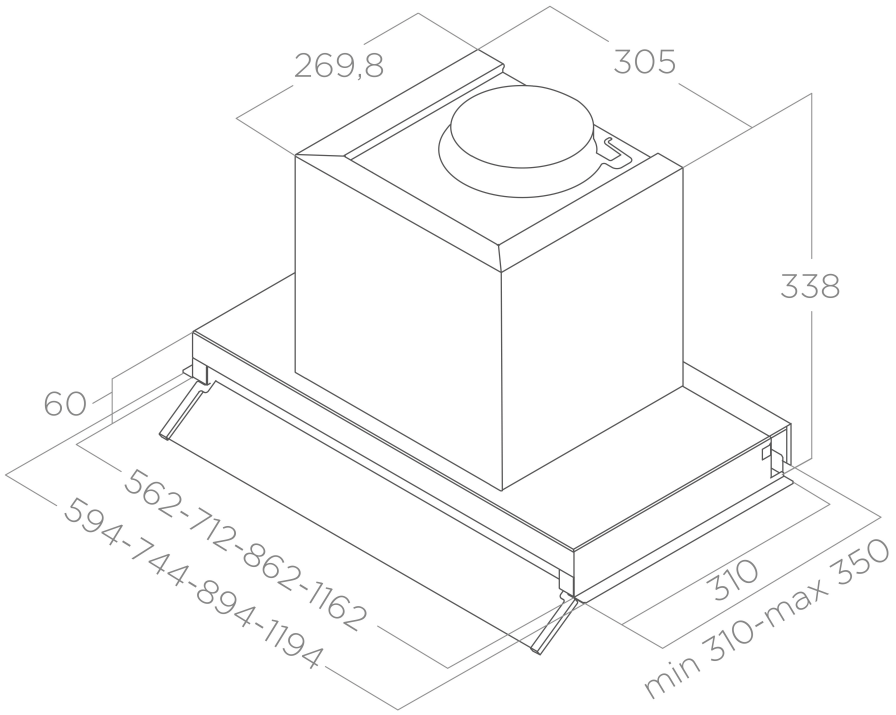
269,8
305
338
60
562-712-862-1162
594-744-894-1194
310
min 310-max 350

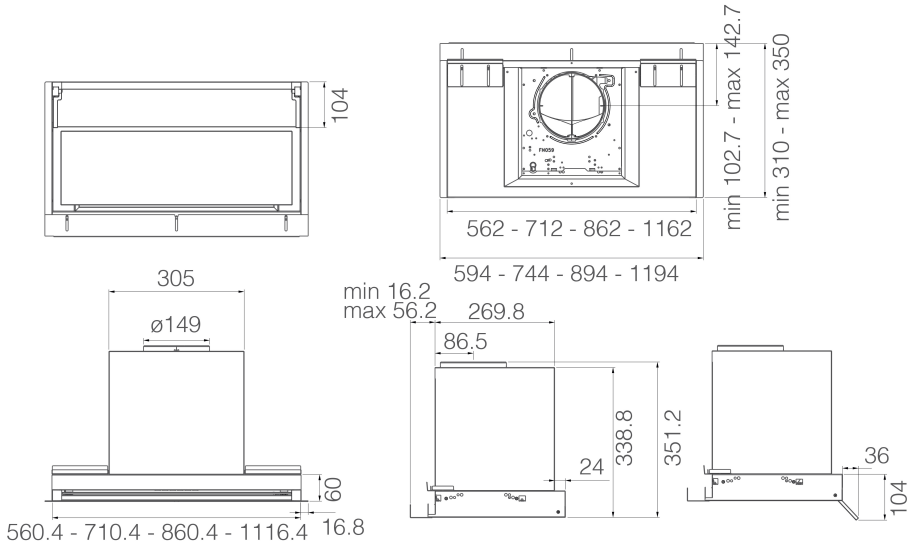
104
min 102.7 - max 142.7
min 310 - max 350
562 - 712 - 862 - 1162
594 - 744 - 894 - 1194
305
ø149
60
560.4 - 710.4 - 860.4 - 1116.4
16.8
min 16.2
max 56.2
269.8
86.5
24
338.8
351.2
36
104